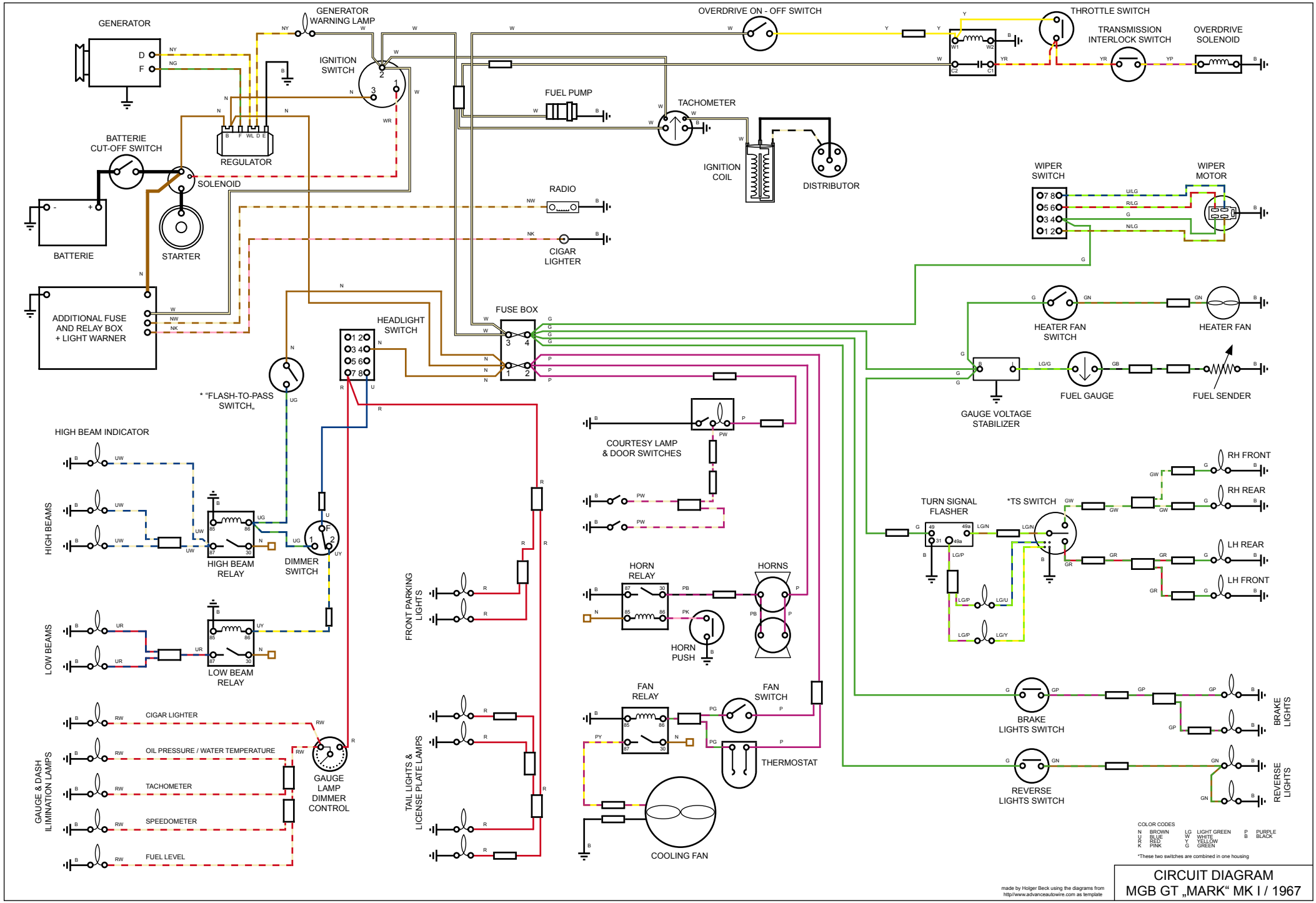
GENERATOR
GENERATOR WARNING LAMP
IGNITION SWITCH
OVERDRIVE ON - OFF SWITCH
THROTTLE SWITCH
TRANSMISSION INTERLOCK SWITCH
OVERDRIVE SOLENOID
FUEL PUMP
TACHOMETER
IGNITION COIL
DISTRIBUTOR
BATTERIE CUT-OFF SWITCH
REGULATOR
SOLENOID
BATTERIE
STARTER
RADIO
CIGAR LIGHTER
WIPER SWITCH
WIPER MOTOR
ADDITIONAL FUSE AND RELAY BOX + LIGHT WARNER
FUSE BOX
HEADLIGHT SWITCH
HEATER FAN SWITCH
HEATER FAN
GAUGE VOLTAGE STABILIZER
FUEL GAUGE
FUEL SENDER
* "FLASH-TO-PASS SWITCH"
HIGH BEAM INDICATOR
COURTESY LAMP & DOOR SWITCHES
TURN SIGNAL FLASHER
*TS SWITCH
RH FRONT
RH REAR
LH REAR
LH FRONT
HIGH BEAMS
HIGH BEAM RELAY
DIMMER SWITCH
LOW BEAMS
LOW BEAM RELAY
FRONT PARKING LIGHTS
HORN RELAY
HORNS
HORN PUSH
FAN RELAY
FAN SWITCH
THERMOSTAT
COOLING FAN
BRAKE LIGHTS SWITCH
BRAKE LIGHTS
REVERSE LIGHTS SWITCH
REVERSE LIGHTS
TAIL LIGHTS & LICENSE PLATE LAMPS
GAUGE & DASH ILIMINATION LAMPS
CIGAR LIGHTER
OIL PRESSURE / WATER TEMPERATURE
TACHOMETER
SPEEDOMETER
FUEL LEVEL
GAUGE LAMP DIMMER CONTROL
COLOR CODES
N BROWN
U BLUE
R RED
K PINK
LG LIGHT GREEN
W WHITE
Y YELLOW
G GREEN
P PURPLE
B BLACK
*These two switches are combined in one housing
made by Holger Beck using the diagrams from http://www.advanceautowire.com as template
CIRCUIT DIAGRAM
MGB GT „MARK“ MK I / 1967
http://www.lampertheim-digital.de

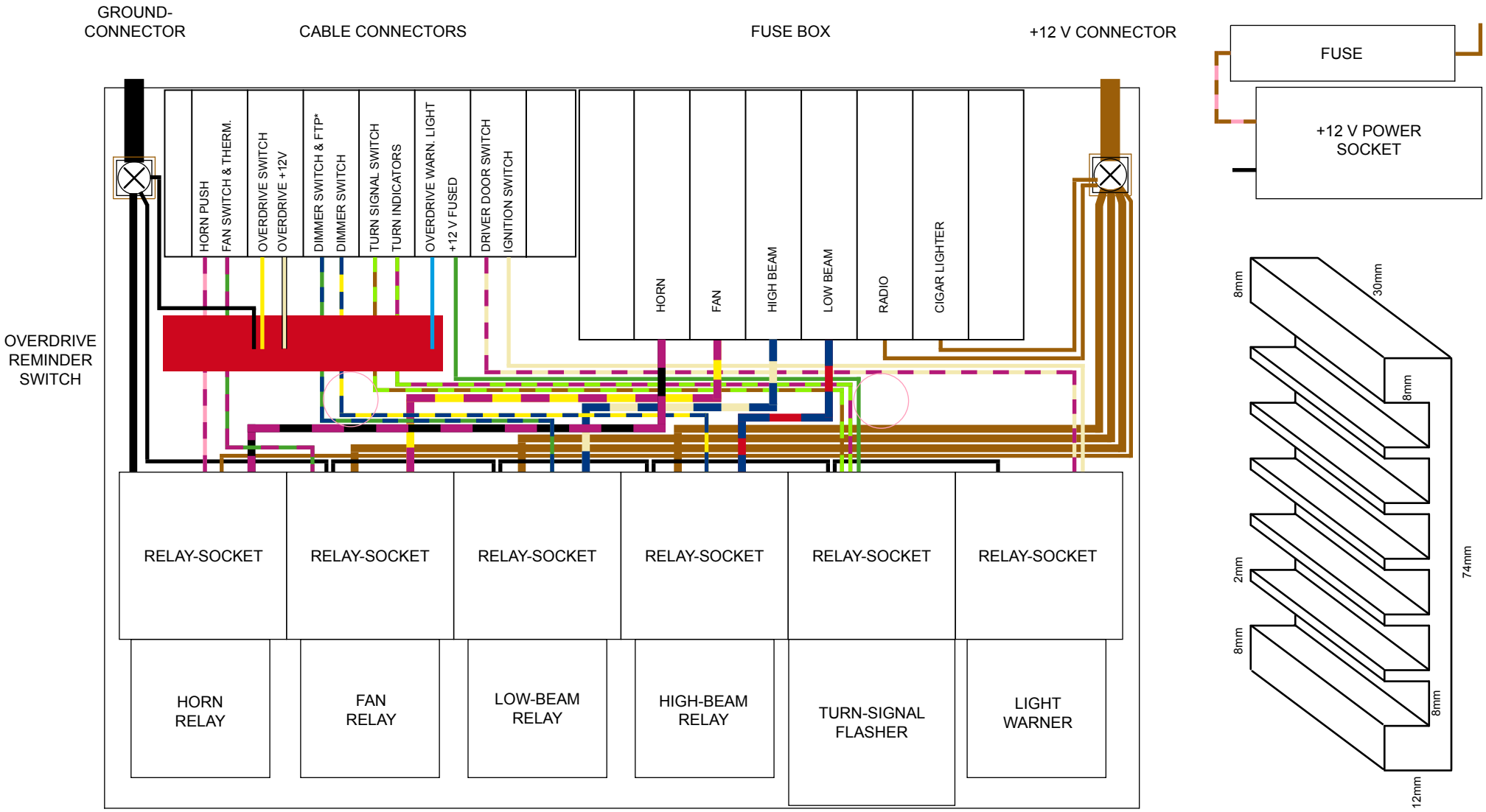

*FTP - „FLASH TO PASS“ SWITCH

ADDITIONAL FUSE AND RELAY BOX + LIGHT WARNER

http://www.lampertheim-digital.de

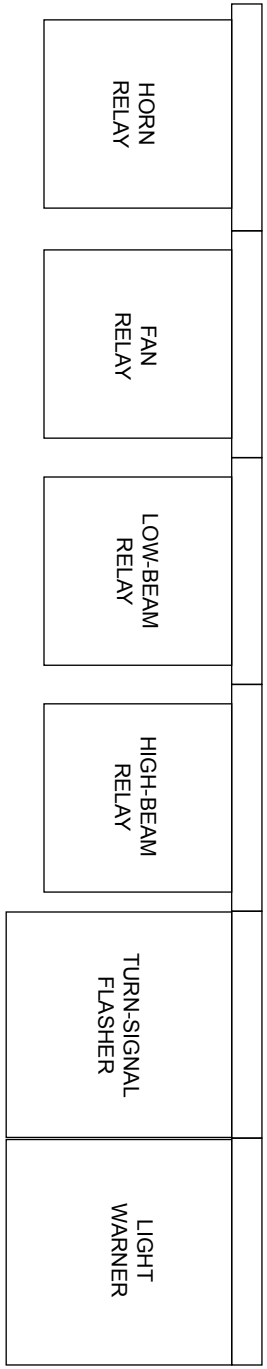
HORN RELAY
FAN RELAY
LOW-BEAM RELAY
HIGH-BEAM RELAY
TURN-SIGNAL FLASHER
LIGHT WARNER

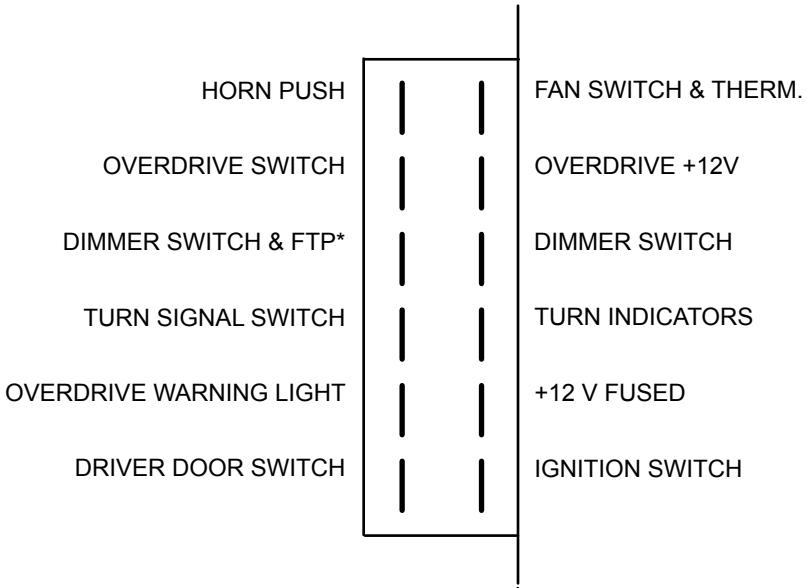
HORN PUSH
OVERDRIVE SWITCH
DIMMER SWITCH & FTP*
TURN SIGNAL SWITCH
OVERDRIVE WARNING LIGHT
DRIVER DOOR SWITCH
FAN SWITCH & THERM.
OVERDRIVE +12V
DIMMER SWITCH
TURN INDICATORS
+12 V FUSED
IGNITION SWITCH

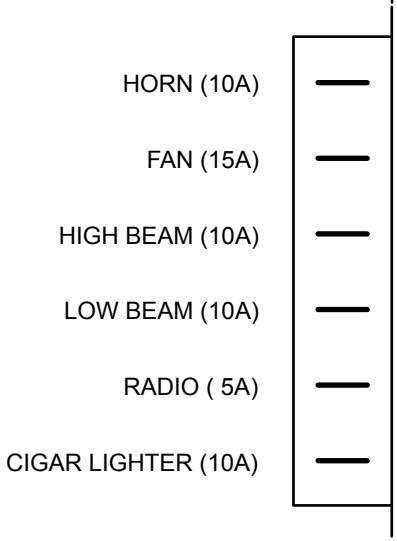
HORN (10A)
FAN (15A)
HIGH BEAM (10A)
LOW BEAM (10A)
RADIO (5A)
CIGAR LIGHTER (10A)